A1

SURFACE ROUGHNESS	RATINGS (a)	UNDER 0.8	UNDER 6.3	UNDER 25	UNDER 100	NOT WA CHINED SURFACE
		▽▽▽	▽▽▽	▽▽	▽	~

PREVIOUS DRAWING
U6-6EA41

REVISIONS

NO.	UC NO.	DESCRIPTION	DATE	ZONE	APP-PROVED	CHECK-ED	DRAWN

1

カム側
CAM SIDE

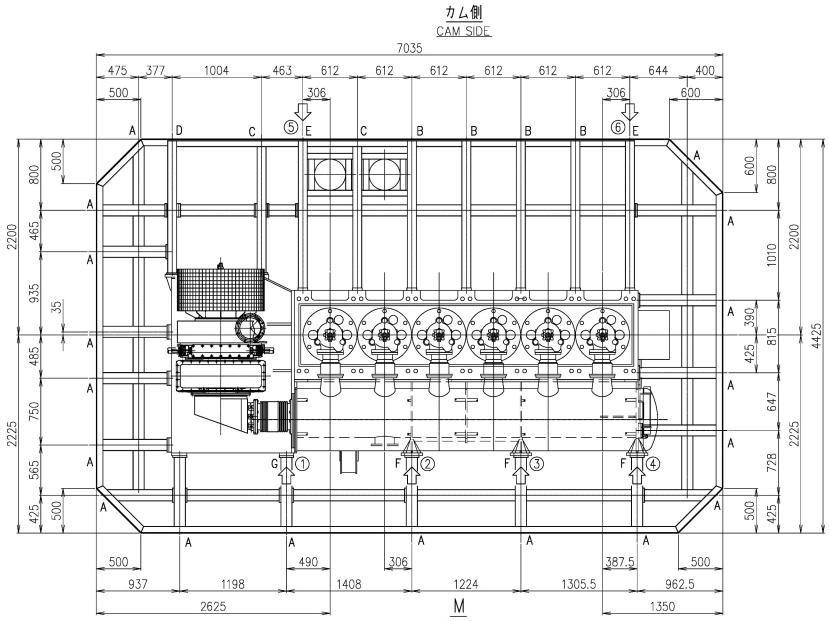

排気側
EXHAUST SIDE

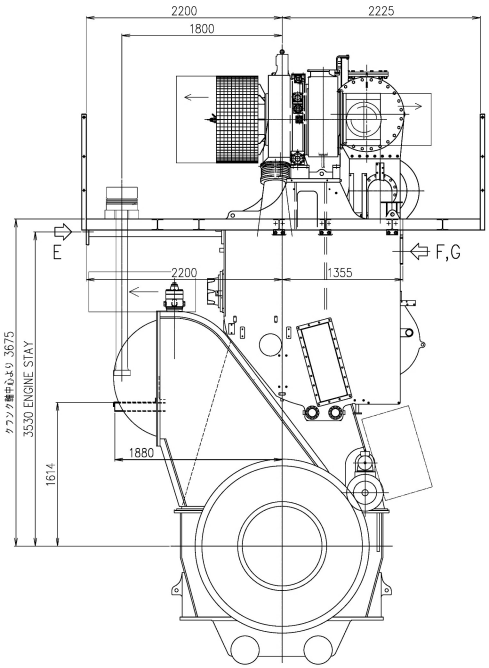

出力軸側より見る
VIEW FROM DRIVING END SIDE

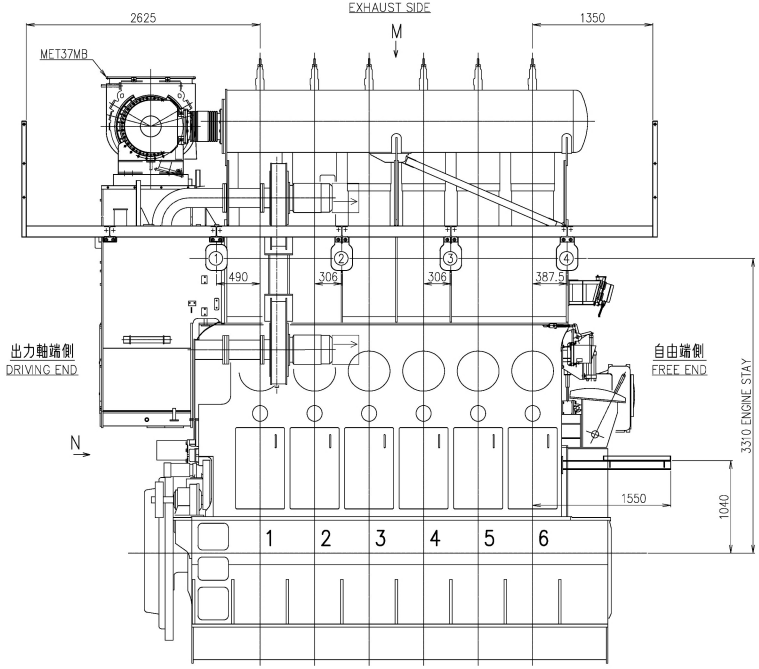

排気側より見る
VIEW FROM EXHAUST SIDE

備考
1.敷板は4.5mmを基準とする。

REMARKS
1.PLATE THICKNESS OF PLATFORM THICKNESS 4.5mm

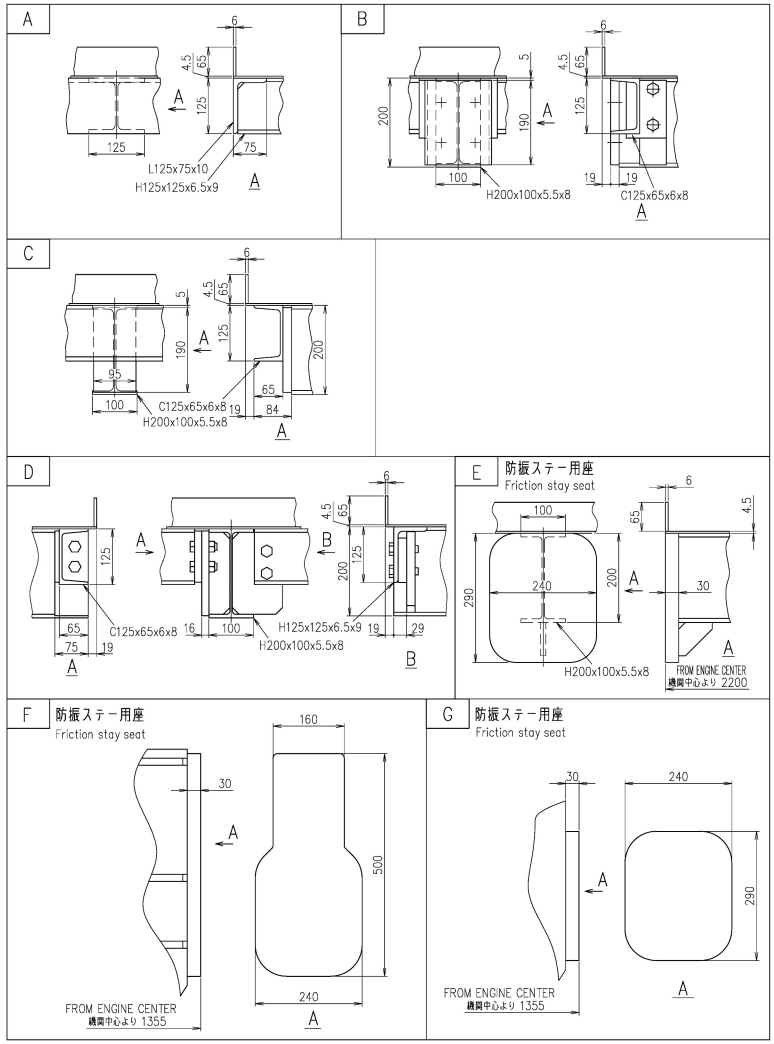

⇦ Position of engine stay attachment points.
：防振ステー配置可能位置

PART NO.	MARK	DESCRIPTION	MATERIALS	TEST P.	1-PIECE WEIGHT (kg)	TOTAL QUANTITY PER SET
	1	PLATFORM ARRANGEMENT 格子配置図				

開発部		6UEC33LSE-C2	
APPROVED 江戸	APPROVED	PLATFORM ARRANGEMENT (MET37MB×1)	
今中			
CHECKED 吉川	CHECKED	格子配置図 (MET37MB×1)	1/1
DRAWN	DRAWN		64-01
1st ANGLE PROJECTION	DATE DRAWN 2020-10-13	DRAWING NO. U6-6EA43	REV.NO.
	SCALE 1/30,1/6		

出図先 品証 調達 組立 機械 生計 検 計

Weld shall comply with JIS (Japan Industrial Standards).
Material shall comply with JIS unless otherwise specified.

JAPAN ENGINE CORPORATION

田中	石井

COMMON VARIATION OF TOLERANCE (MACHINING) (M.M)	RATINGS OF NOMINAL DIMENSION	OVER 0.5 TO 6	OVER 6 TO 30	OVER 30 TO 120	OVER 120 TO 400	OVER 400 TO 1000	OVER 1000TO 2000	OVER 2000TO 4000	OVER 4000TO 8000	OVER 8000TO 16000
	TOLERANCE	±0.1	±0.2	±0.3	±0.5	±0.8	±1.2	±2.0	±2.0	±2.5

THIS DRAWING IS THE PROPERTY OF JAPAN ENGINE CORPORATION.
AND SHALL NOT BE REPRODUCED, NOT BE USED TO FURNISH ANY INFORMATION FOR MAKING DRAWINGS OR APPARATUS EXCEPT FOR THE CASE WHERE JAPAN ENGINE CORPORATION AGREES WITH WRITTEN MATERIALS.