A1

SURFACE ROUGHNESS	RATINGS (a)	UNDER 0.8	UNDER 6.3	UNDER 25	UNDER 100	NOT MACHINED SURFACE
		▽▽▽▽	▽▽▽	▽▽	▽	~

PREVIOUS DRAWING U1-1N008

REVISIONS

NO.	UC NO.	DESCRIPTION	DATE	ZONE	APP-PROVED	CHECK-ED	DRAWN

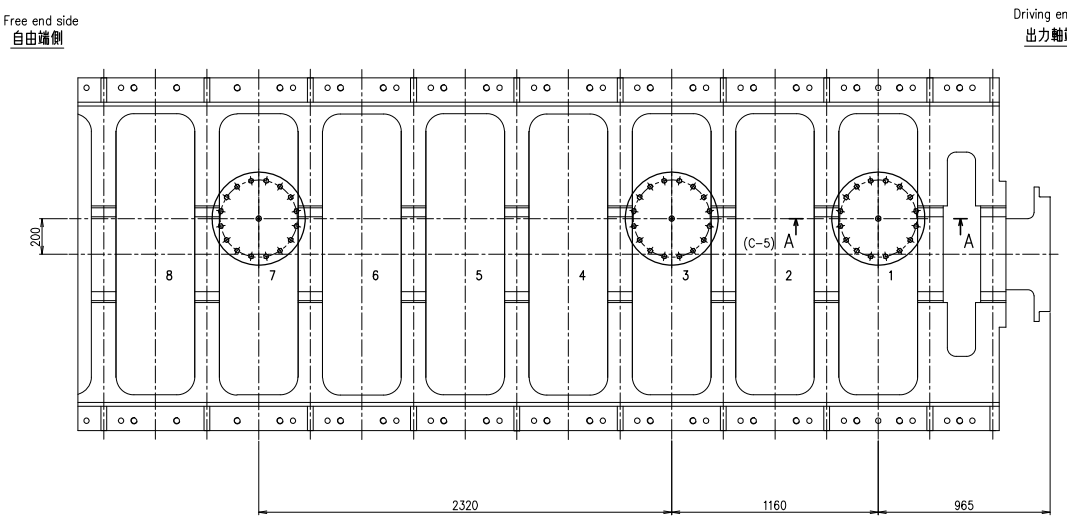

Top view
上面視

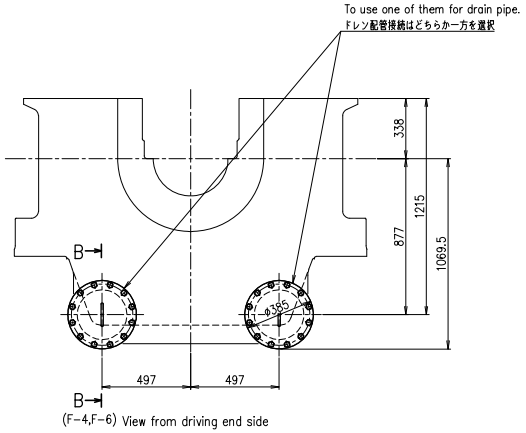

(F-4,F-6) View from driving end side
出力軸端側より見る

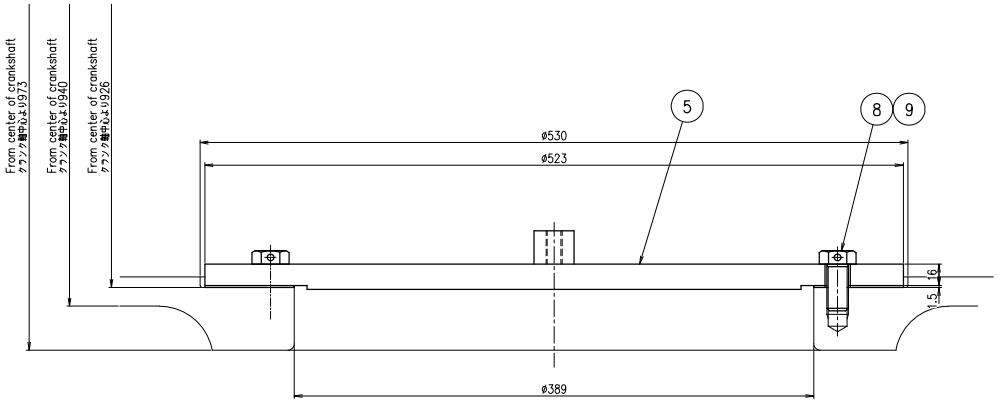

A-A
(C-2)

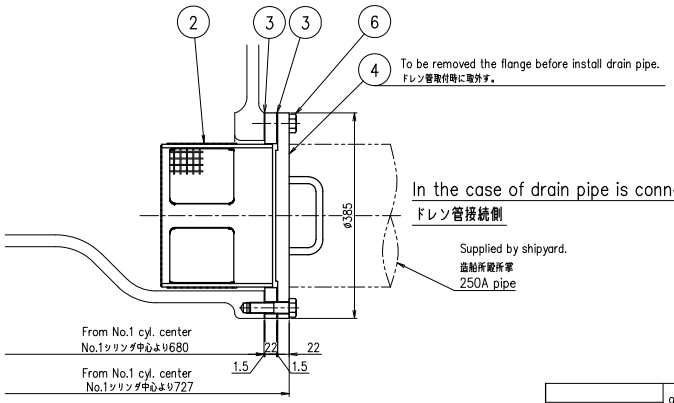

B-B
(F-2)

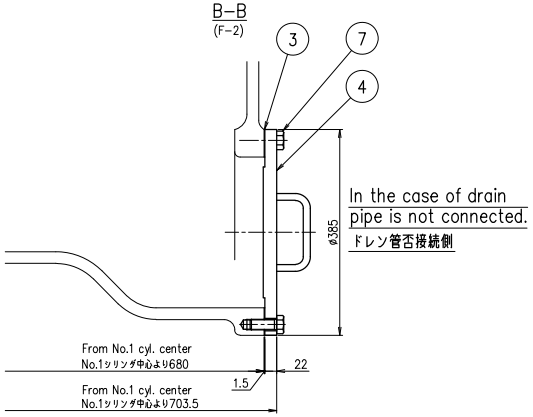

B-B
(F-2)

PART NO.	MARK	DESCRIPTION	MATERIALS	TEST P.	1-PIECE WEIGHT (kg)	TOTAL WEIGHT (kg)	QUANTITY PER SET
	9	Wire 針金 ø1.6×6000L	SWMG1				1
U1008.09.16	8	Hex. head bolt with wire hole 針金穴付き六角ボルトM16×35	SS400		0.1	4.4	48
U1010.11.19	7	Hex. head bolt with wire hole 10.9 六角ボルト M20×50	SCM435Q		0.19	2.2	12
U1010.11.24	6	Hex. head bolt with wire hole 10.9 六角ボルト M20×75	SCM435Q		0.28	3.4	12
U1-1N012-01	5	Cover ふた			29.0	87.0	3
U6-7K225-K0	4	Blind frange 5K 閉止フランジ 250A	SS400		20.6	41.2	2
U1-1N013-01	3	Gasket ガスケット	Tombo #1995		0.13	0.4	3
U1-1N011-01	2	Oil straner オイルストレーナ			19.0		1
	1	Bed plate oil drain (aft side) 台板油落し要領図（後端落し）			159		1

開発部		8UEC33LSH	
APPROVED 江戸	APPROVED	Bed Plate Oil Drain (Aft Side)	
CHECKED 飯間	CHECKED		
DRAWN 吉川	DRAWN 甘利	台板油落し要領図（後端落し）	1/1 52-11
1st ANGLE PROJECTION	DATE DRAWN 2023.2.17 / SCALE 1/15.1/5,1/2	DRAWING NO. U1-1N038	REV.NO.

出図先 品証 調達 組立 機械 生計 陸 計

Weld shall comply with JIS (Japan Industrial Standards).
Material shall comply with JIS unless otherwise specified.

JAPAN ENGINE CORPORATION

COMMON VARIATION OF TOLERANCE (MACHINING) (M.M)	RATINGS OF NOMINAL DIMENSION	OVER 0.5 TO 6	OVER 6 TO 30	OVER 30 TO 120	OVER 120 TO 400	OVER 400 TO 1000	OVER 1000TO 2000	OVER 2000TO 4000	OVER 4000TO 8000	OVER 8000TO 16000
	TOLERANCE	± 0.1	± 0.2	± 0.3	± 0.5	± 0.8	± 1.2	± 2.0	± 2.0	± 2.5

THIS DRAWING IS THE PROPERTY OF JAPAN ENGINE CORPORATION AND SHALL NOT BE REPRODUCED, NOT BE USED TO FURNISH ANY INFORMATION FOR MAKING DRAWINGS OR APPARATUS EXCEPT FOR THE CASE WHERE JAPAN ENGINE CORPORATION AGREES WITH WRITTEN MATERIALS.

ACAD