SURFACE TOLERANCE	RATINGS (*)	UNDER 0.6	UNDER 6.3	UNDER 25	UNDER 100	OVER CHANGE SURFACE
		∨∨∨	∨∨∨	∨∨	∨	~

1st ANGLE PROJECTION

ISO METRIC SCREW THREADS

REVISIONS						PLAN RECORD
NO.	DESCRIPTION	(DATE)	ZONE	APPROVED	CHECKED	PREVIOUS DRAWING
A	過給機取付位置変更した。 UC11066 NSE	2017-06-12	B-1	今中	岡村	U1-0E057 空気冷却器 950mm×455mm×1395mm用 鋳物台板用

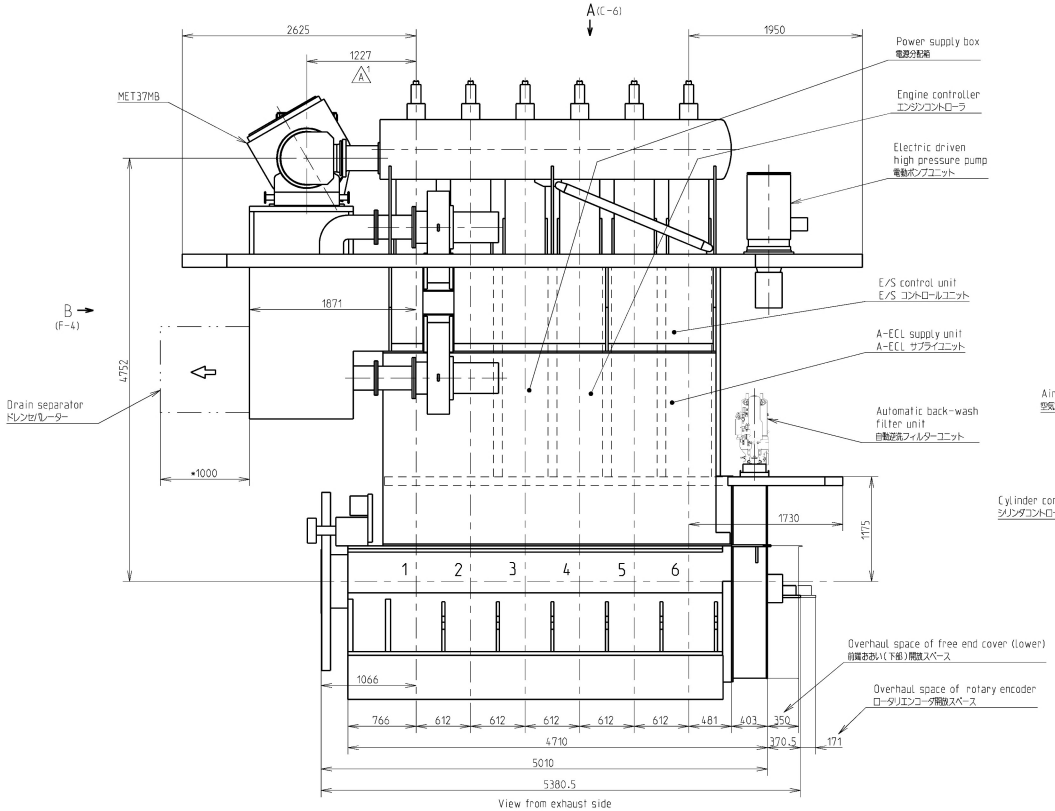

View from exhaust side
排気側より見る

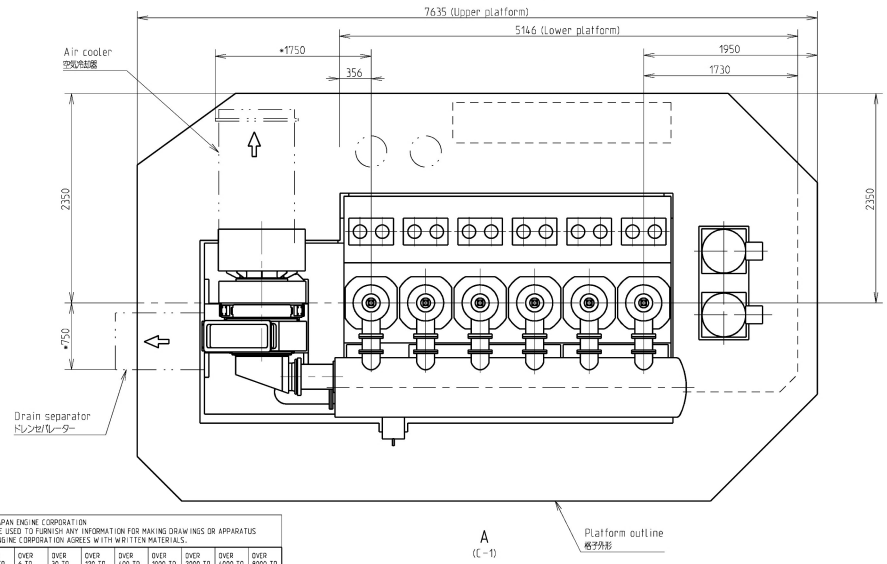

A
(C-1)

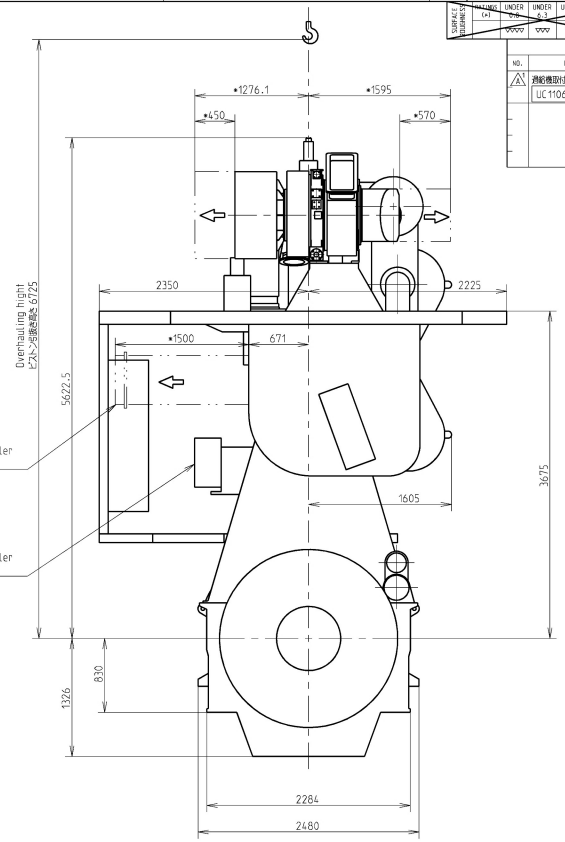

B
(A-2)

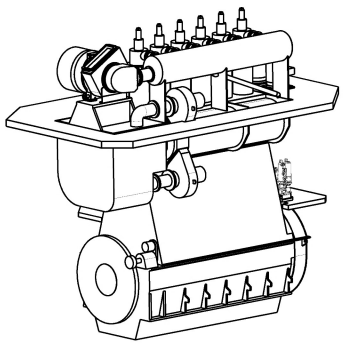

1/60

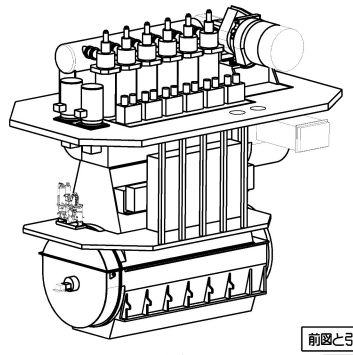

1/60

前図と引換えのこと

基本図

* Space for removal
* 開放スペース

SPARE	WORKING	PART NO.	MARK	DESCRIPTION	MATERIALS	TEST P.	1-PIECE	TOTAL
							WEIGHT(kg)	QUANTITY PER SET

DATE	REF.	開発部		6UEC35LSE-Eco
		APPROVED 三柳, 柳	APPROVED	Engine outline view
DROTER NO.	ITEM NO.	CHECKED 今中	CHECKED	
		DRAWN 岡村	DRAWN	機関全体外形図(MET37MB×1) 1/1 00-00
OWNER		DATE DRAWN 2017-06-05		DRAWING NO. U1-0E059 REV.NO. A
		SCALE 1/30		

出図先 品証 調達 組立 機械 生計 控 計

THIS DRAWING IS THE PROPERTY OF JAPAN ENGINE CORPORATION
AND SHALL NOT BE REPRODUCED, NOR BE USED TO FURNISH ANY INFORMATION FOR MAKING DRAWINGS OR APPARATUS
EXCEPT FOR THE CASE WHERE JAPAN ENGINE CORPORATION AGREES WITH WRITTEN MATERIALS.

COMMON VARIATION TOLERANCE (MACHINING) (M.M)	RATINGS OF NOMINAL DIMENSION	OVER 0.5 TO 6	OVER 6 TO 30	OVER 30 TO 120	OVER 120 TO 400	OVER 400 TO 1000	OVER 1000 TO 2000	OVER 2000 TO 4000	OVER 4000 TO 8000	OVER 8000 TO 16000
	TOLERANCE	±0.1	±0.2	±0.3	±0.5	±0.8	±1.2	±2.0	±2.0	±2.5

NSE

JP-CAD

JAPAN ENGINE CORPORATION

DRAWING NO. U1-0E059 REV.NO. A

DRAWING NO. U1-0E059 REV.NO. A