A1

SURFACE ROUGHNESS	RATINGS (a)	UNDER 0.8	UNDER 6.3	UNDER 25	UNDER 100	ANY-WA CHINED SURFACE
		▽▽▽▽	▽▽▽	▽▽	▽	~

PREVIOUS DRAWING
U6-6E233/D

REVISIONS

NO.	UC NO.	DESCRIPTION	DATE	ZONE	APP-PROVED	CHECK-ED	DRAWN

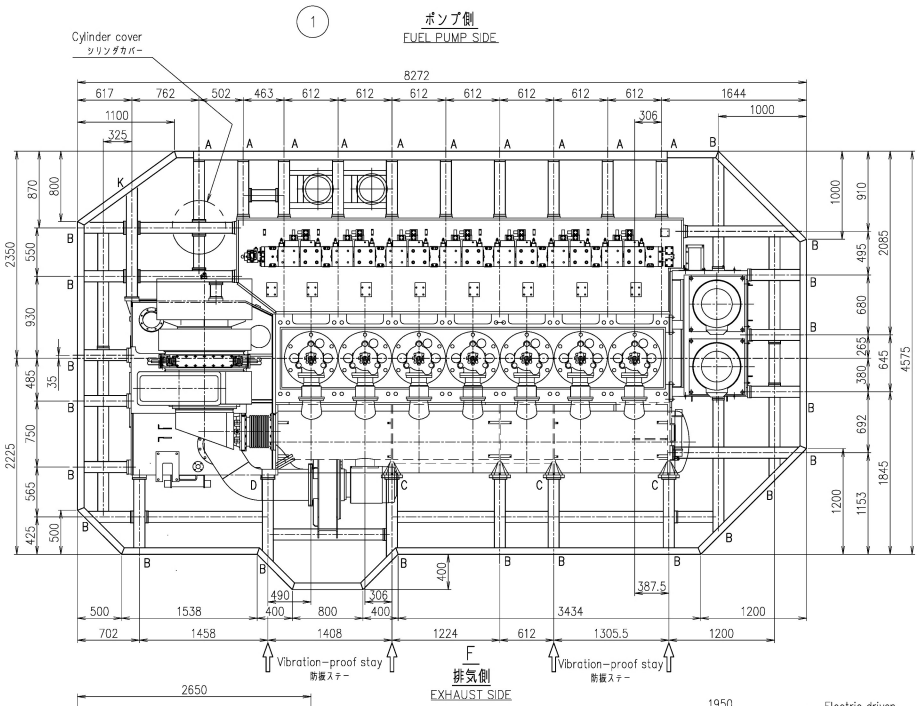

F
排気側
EXHAUST SIDE

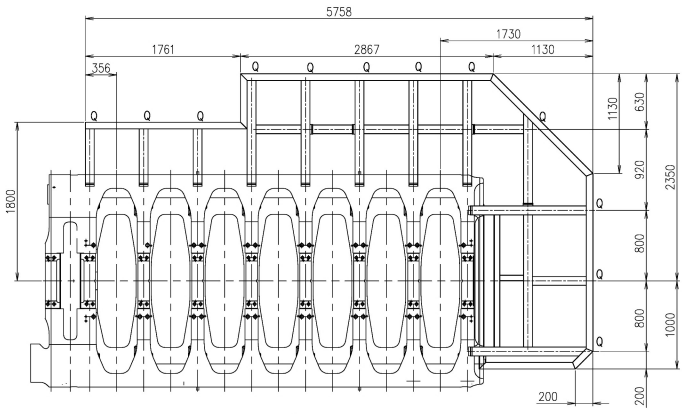

P-P
下部支腕

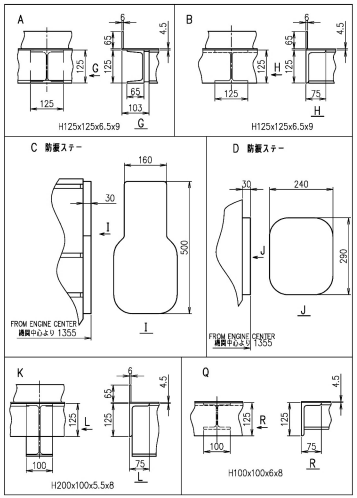

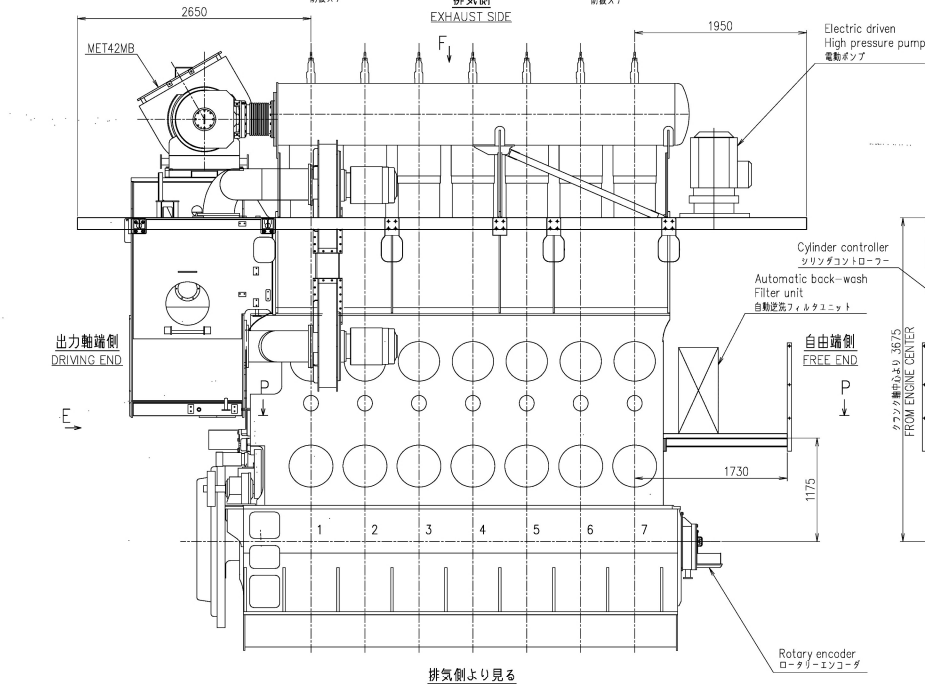

排気側より見る
VIEW FROM EXHAUST SIDE

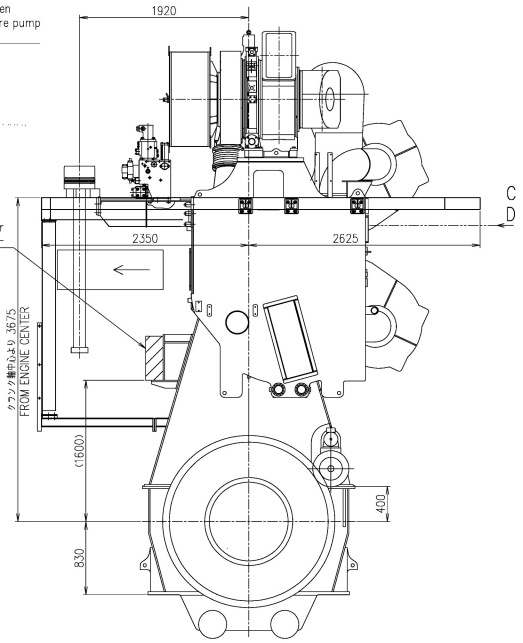

E
出力軸側より見る
VIEW FROM DRIVING END SIDE

備考
1.敷板は4.5mmを基準とする。

REMARKS
1.PLATE THICKNESS OF PLATFORM TO BE 4.5mm

PART NO.	MARK	DESCRIPTION	MATERIALS	TEST P.	1-PIECE WEIGHT (kg)	TOTAL QUANTITY PER SET
	1	PLATFORM ARRANGEMENT 格子配置図				

開発部		7UEC35LSE-Eco
APPROVED 江戸 吉川、木下	APPROVED	PLATFORM ARRANGEMENT (MET42MB×1)
CHECKED 岡村	CHECKED	格子配置図 (MET42MB×1) 1/1
DRAWN Abis	DRAWN	64-01
1st ANGLE PROJECTION	DATE DRAWN 2019-07-02 / SCALE 1/30.1/6	DRAWING NO. U6-6E916 REV.NO.

出図先 品証 測量 組立 機械 生計 経計

Weld shall comply with JIS (Japan Industrial Standards).
Material shall comply with JIS unless otherwise specified.

JAPAN ENGINE CORPORATION

COMMON VARIATION OF TOLERANCE (MACHINING) (M.M)	RATINGS OF NOMINAL DIMENSION	OVER 0.5 TO 6	OVER 6 TO 30	OVER 30 TO 120	OVER 120 TO 400	OVER 400 TO 1000	OVER 1000TO 2000	OVER 2000TO 4000	OVER 4000TO 8000	OVER 8000TO 16000
	TOLERANCE	±0.1	±0.2	±0.3	±0.5	±0.8	±1.2	±2.0	±2.0	±2.5

THIS DRAWING IS THE PROPERTY OF JAPAN ENGINE CORPORATION. AND SHALL NOT BE REPRODUCED, NOT BE USED TO FURNISH ANY INFORMATION FOR MAKING DRAWINGS OR APPARATUS EXCEPT FOR THE CASE WHERE JAPAN ENGINE CORPORATION AGREES WITH WRITTEN MATERIALS.