A1

SURFACE ROUGHNESS	RATINGS (μ)	UNDER 0.8	UNDER 6.3	UNDER 25	UNDER 100	MAP-MACHINED SURFACE
		▽▽▽▽	▽▽▽	▽▽	▽	~

PREVIOUS DRAWING
U1-0E104

REVISIONS

NO.	UC NO.	DESCRIPTION	DATE	ZONE	APPROVED	CHECKED	DRAWN
A3	UC13618	下部一自由端側へ防振金物を追加した。	2022.01.06	0-3,C-4	永嶋	吉川	鹿室

鋳物台板用

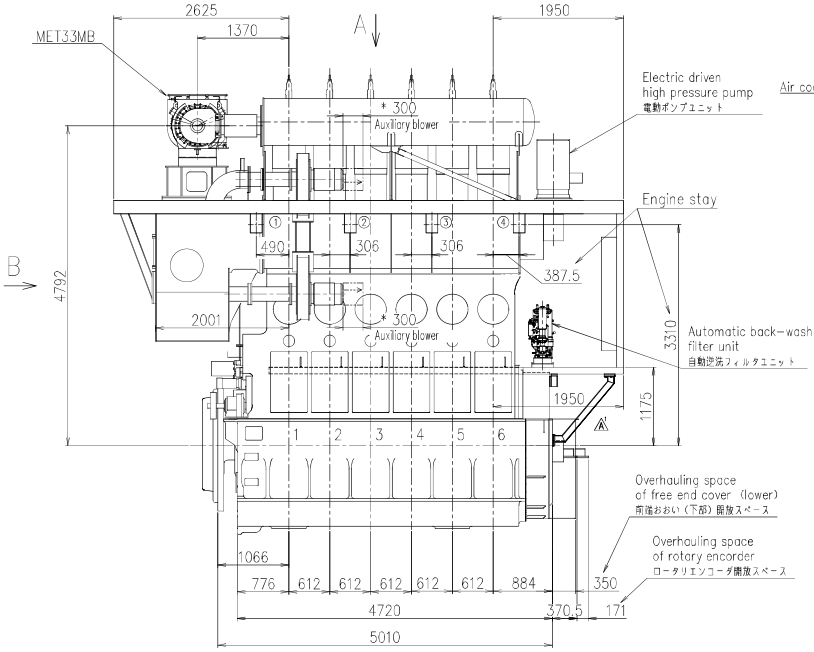

View from exhaust side
排気側より見る

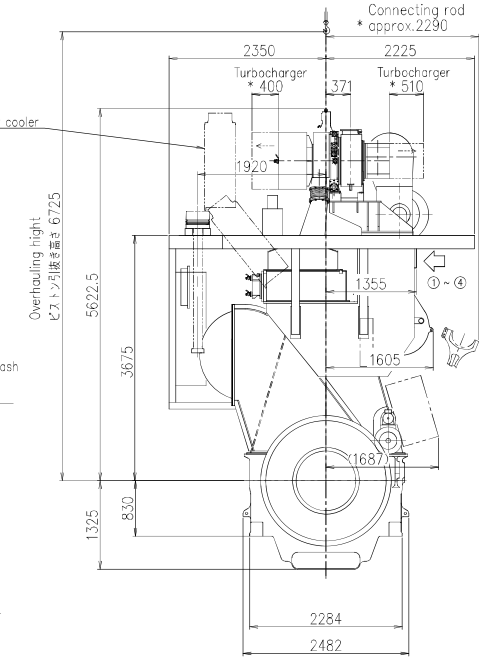

View B
B視

:防振ステー配置可能位置
:Position of engine stay

Engine stay type		①	②	③	④	Total	Drawing No.
Friction	CASE1	○	○	○	○	4	U2-1E001
	CASE2	○			○	2	

*Space for removal
開放スペース

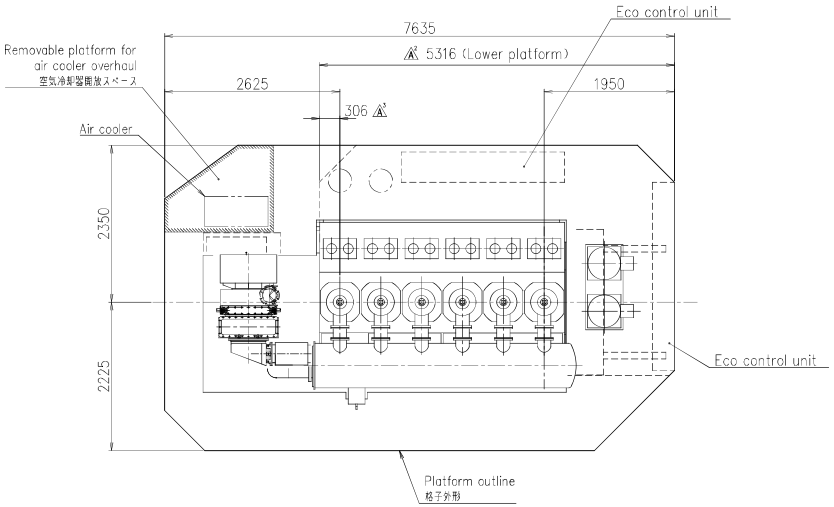

View A
A視

PART NO.	MARK	DESCRIPTION	MATERIALS	TEST P.	1-PIECE WEIGHT (kg)	TOTAL	QUANTITY PER SET
	1	Engine outline view 機関全体外形図					1

開発部		6UEC35LSJ
APPROVED 江戸	APPROVED	Engine Outline View (MET33MB)
今中		
CHECKED 古川	CHECKED	機関全体外形図 (MET33MB) 1/1
DRAWN 甘利	DRAWN	00-00

1st ANGLE PROJECTION	DATE DRAWN 2021.04.09	DRAWING NO. U1-0E114	REV.NO. A
	SCALE 1/40		

出図先 品証 調達 組立 機械 生計 控 計

Weld shall comply with JIS (Japan Industrial Standards).
Metrial shall comply with JIS unless otherwise specified.

JAPAN ENGINE CORPORATION

COMMON VARIATION OF TOLERANCE (MACHINING) (M.M)	RATINGS OF NOMINAL DIMENSION	OVER 0.5 TO 6	OVER 6 TO 30	OVER 30 TO 120	OVER 120 TO 400	OVER 400 TO 1000	OVER 1000TO 2000	OVER 2000TO 4000	OVER 4000TO 8000	OVER 8000TO 16000
	TOLERANCE	±0.1	±0.2	±0.3	±0.5	±0.8	±1.2	±2.0	±2.0	±2.5

THIS DRAWING IS THE PROPERTY OF JAPAN ENGINE CORPORATION. AND SHALL NOT BE REPRODUCED, NOT BE USED TO FURNISH ANY INFORMATION FOR MAKING DRAWINGS OR APPARATUS EXCEPT FOR THE CASE WHERE JAPAN ENGINE CORPORATION AGREES WITH WRITTEN MATERIALS.

ACAD