A1

SURFACE ROUGHNESS	RATINGS (a)	UNDER 0.8	UNDER 6.3	UNDER 25	UNDER 100	NOT MACHINED SURFACE
	▽▽▽▽	▽▽▽	▽▽	▽	～	

PREVIOUS DRAWING
U1-0M007,9

REVISIONS

NO.	UC NO.	DESCRIPTION	(DATE)	ZONE	APP-PROVED	CHECK-ED	DRAWN
A2	UC12488	防振ステー配置を見直した。	2020-4-2	D-1 F,G-2	木下	吉川	甘利
B3	UC12575	下部結子排気側寸法を変更した。	2020-7-21	C-2 B,F-4	木下	吉川	甘利
C2	UC13254	防振ステー高さ寸法を変更した。	2021-7-21	A,C-4	木下	吉川	甘利

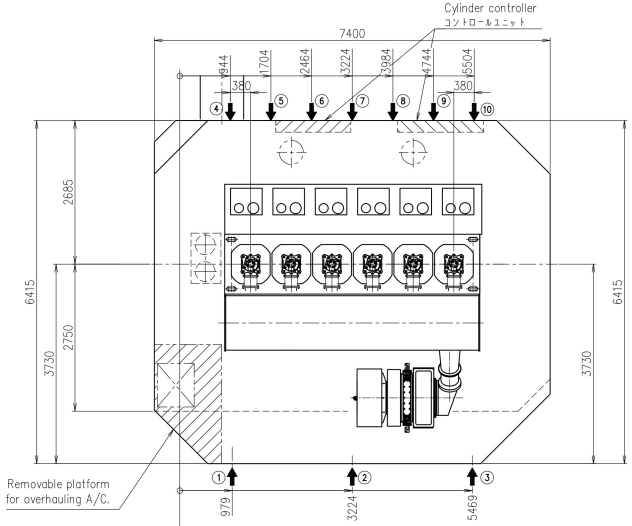

PLAN
平面図

Position of engine stay attachment.
⬅：防振ステー配置位置

	Type	Total	Exh.side ①	②	③	Pump side ④	⑤	⑥	⑦	⑧	⑨	⑩	
CASE1	Friction	3	◎	◎	◎	×	×	×	×	×	×	×	◎◯ : Standard position △ : Optional position Optional position can be applied as below.
CASE2	Hydraulic	4	◎	×	◎	◎	×	×	×	×	×	◎	
CASE3	Friction	4	◎	×	◎	◎	×	×	×	×	×	◎	
CASE4	Friction	3	×	×	×	◎	×	△	◯	△	×	◎	⑦ → ⑥ or ⑧
CASE5	Friction	4	×	×	×	◎	△	◯	△	◯	△	◎	⑥ → ⑤ or ⑦ ⑧ → ⑦ or ⑨

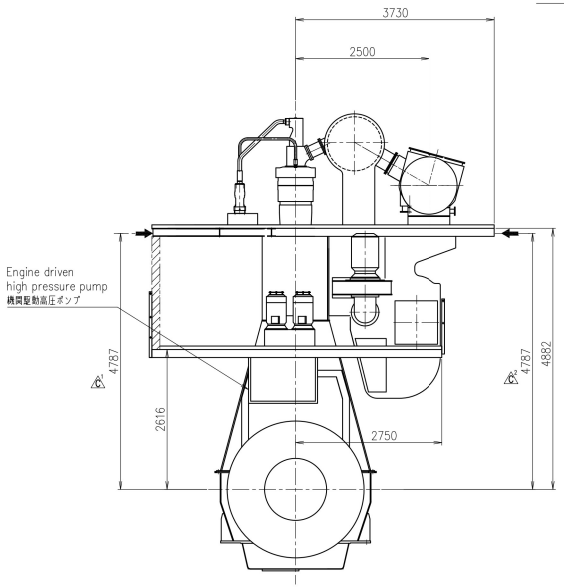

DRIVING END
出力軸側より見る

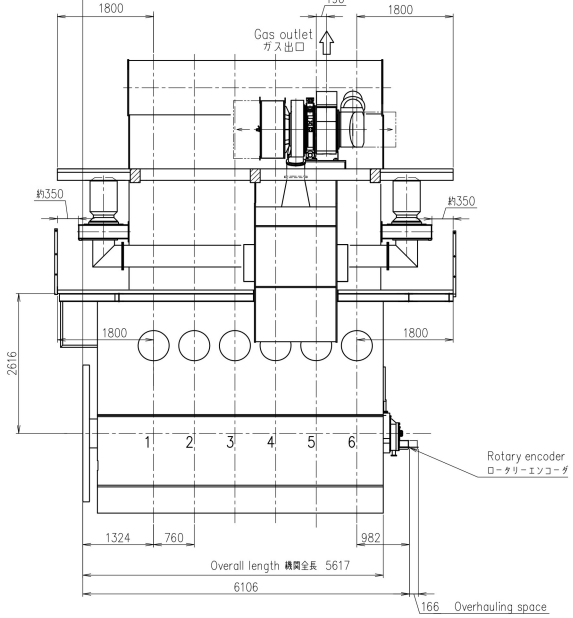

EXHAUST SIDE
排気側より見る

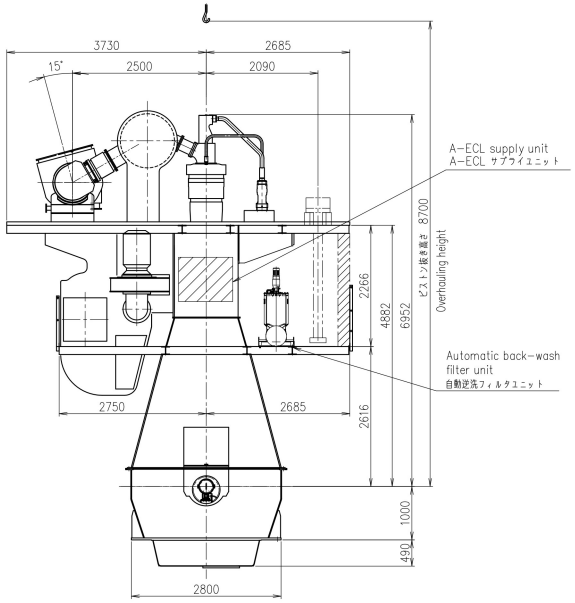

FREE END
自由端より見る

PROVISIONAL
CONFIDENTIAL

	1	GENERAL ARRANGEMENT (OUTLINE) 全体装置外形図				
PART NO.	MARK	DESCRIPTION	MATERIALS	TEST P.	1-PIECE WEIGHT (kg)	TOTAL WEIGHT (kg) / QUANTITY PER SET

開発部		6UEC42LSH-Eco	
APPROVED 江戸	APPROVED	GENERAL ARRANGEMENT (OUTLINE)	
CHECKED 木下	CHECKED	全体装置外形図 (MET42MB×1)	1/1
DRAWN 田中	DRAWN		00-00
1st ANGLE PROJECTION	DATE DRAWN 2020-01-16 / SCALE 1/50	DRAWING NO. U1-0M010	REV.NO. C

COMMON VARI-ATION OF TOLERANCE (MACHINING) (M.M)	RATINGS OF NOMINAL DIMENSION	OVER 0.5 TO 6	OVER 6 TO 30	OVER 30 TO 120	OVER 120 TO 400	OVER 400 TO 1000	OVER 1000 TO 2000	OVER 2000 TO 4000	OVER 4000 TO 8000	OVER 8000 TO 16000
	TOLERANCE	±0.1	±0.2	±0.3	±0.5	±0.8	±1.2	±2.0	±2.0	±2.5

THIS DRAWING IS THE PROPERTY OF JAPAN ENGINE CORPORATION.
AND SHALL NOT BE REPRODUCED, NOT BE USED TO FURNISH ANY INFORMATION
FOR MAKING DRAWINGS OR APPARATUS EXCEPT FOR THE CASE WHERE
JAPAN ENGINE CORPORATION AGREES WITH WRITTEN MATERIALS.

JAPAN ENGINE CORPORATION