A1

SURFACE ROUGHNESS	RATINGS	UNDER 0.8	UNDER 6.3	UNDER 25	UNDER 100	ANY OTHER FINISHED SURFACE
	1a?					

PREVIOUS DRAWING
U6-6KK06,U6-6KS61,U1-0K069

REVISIONS

NO.	UC NO.	DESCRIPTION	DATE	ZONE	APP-PROVED	CHECK-ED	DRAWN

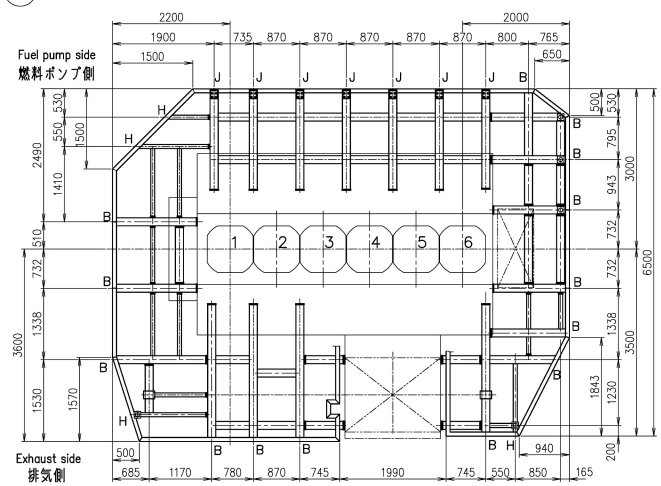

Lower platform
下部格子

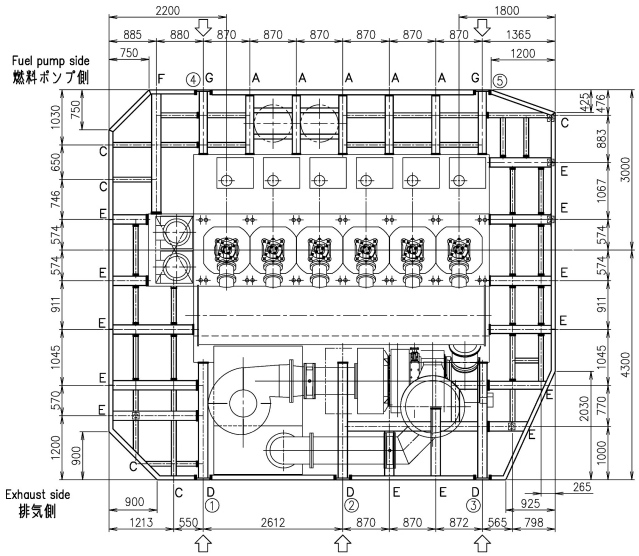

Upper platform
上部格子

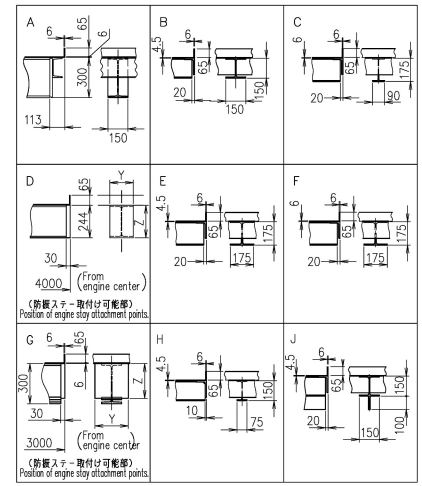

Position of engine stay attachment points.
：防振ステー配置可能位置

Engine stay type		①	②	③	④	⑤	TOTAL	Y	Z
Friction	CASE1	○	○	○			3	175	244
	CASE2	○		○	○	○	4		
Hydrauric		○		○	○	○	4	250	260

備考
1.次のものは、供給範囲に含まれません。
(A) 上部格子用外側支柱及び同手摺
(B) 梯子(フロア←→下部格子及び、下部格子←→上部格子間)
2.敷板　上部ポンプ側　T6
それ以外　T4.5

Remarks
1.Following shall be supplied by the shipbuilder.
(A) Handrail and props on upper platform
(B) Large stairs between upper-and middle-and lower-platforms.
2.Plate thickness of platform
Upper platform (pump side) t=6
Upper platform (exhaustside) } t=4.5
Lower platform

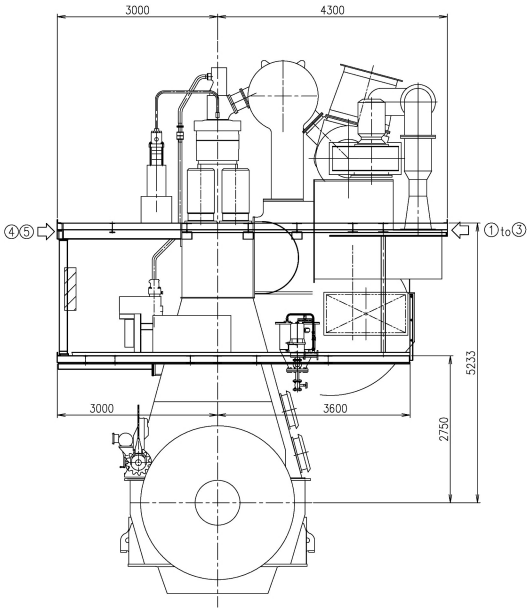

View from driving end
出力軸端より見る

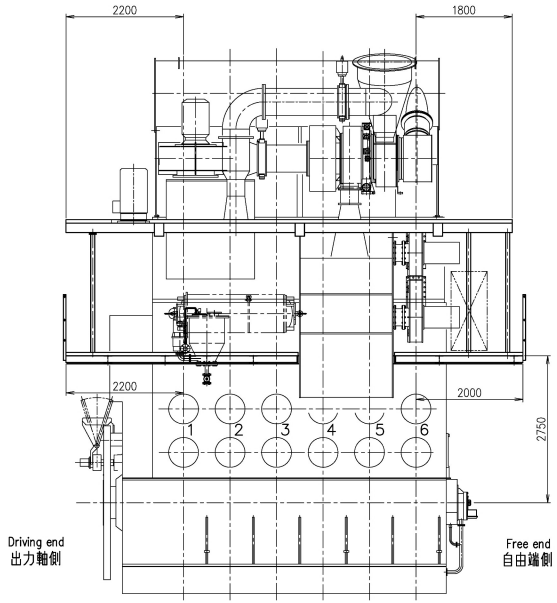

View from exhaust side
排気側より見る

	1	Platform arrangement 格子配置図				1	
PART NO.	MARK	DESCRIPTION	MATERIALS	TEST P.	1-PIECE WEIGHT (kg)	TOTAL WEIGHT (kg)	QUANTITY PER SET

開発部		6UEC50LSJ-EGR	
APPROVED 江戸	APPROVED	Platform Arrangement	
CHECKED 木下	CHECKED		1/1
DRAWN 古川	DRAWN 甘利	格子配置図	64-01
1st ANGLE PROJECTION	DATE DRAWN 2020.3.10	DRAWING NO. U6-6KT08	REV.NO.
	SCALE 1/50		

出図先 品証 調達 組立 機械 生計 終計

Weld shall comply with JIS (Japan Industrial Standards).
Material shall comply with JIS unless otherwise specified.

JAPAN ENGINE CORPORATION

COMMON VARI-ATION OF TOLERANCE (MACHINING) (M.M)	RATINGS OF NOMINAL DIMENSION	OVER 0.5 TO 6	OVER 6 TO 30	OVER 30 TO 120	OVER 120 TO 400	OVER 400 TO 1000	OVER 1000TO 2000	OVER 2000TO 4000	OVER 4000TO 8000	OVER 8000TO 16000
	TOLERANCE	±0.1	±0.2	±0.3	±0.5	±0.8	±1.2	±2.0	±2.0	±2.5

THIS DRAWING IS THE PROPERTY OF JAPAN ENGINE CORPORATION AND SHALL NOT BE REPRODUCED, NOT BE USED TO FURNISH ANY INFORMATION FOR MAKING DRAWINGS OR APPARATUS EXCEPT FOR THE CASE WHERE JAPAN ENGINE CORPORATION AGREES WITH WRITTEN MATERIALS.

ACAD